REF. NO.	DATE
NP - 350	2-21-49
NP-679	6-8-49

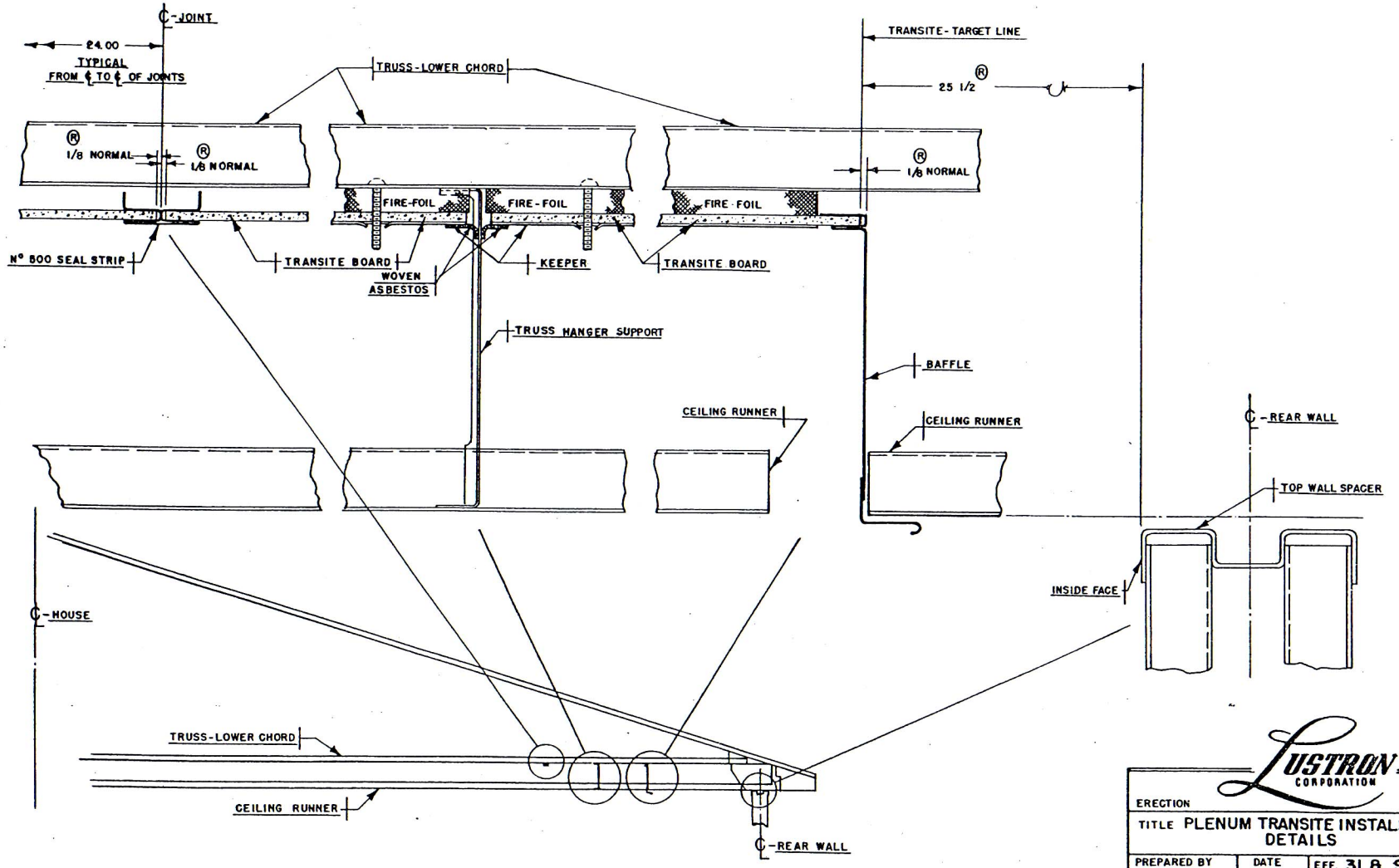

LUSTRON CORPORATION

ERECTION MANUAL

TITLE PLENUM TRANSITE INSTALLATION DETAILS

PREPARED BY	DATE	EFF. 31 & SUB.
GBE	1-31-49	DRAWING NUMBER
REVISED ® 6-7-49	R.H.G.	EM-02-F-10.12